Technical data sheet

Spacer clip 732 A4

Item number: 1362462

Spacer clip for the installation of pipes and cables on walls, ceilings and floors. With self-locking cover. Fastening via attachment piece with internal thread.

Approved for the maintenance of electrical function according to DIN 4102 Part 12, maintenance of electrical function classes E 30 to E 90.

E30 E60 E90

A4 Stainless steel

Master data

Item number	1362462
Type	ASG 732 12 A4
Description 1	Distance saddle
Description 2	with threaded connection M6
Manufacturer	OBO
Dimension	10-12mm
Material	Stainless steel 1.4571
Smallest sales unit	25
Unit of quantity	Piece
Weight	1.821 kg
Weight unit	kg/100 pc.
CO2 Footprint (GWP) Cradle-to-Gate	0,1592 kg CO2e / 1 Piece

Technical data sheet

Spacer clip 732 A4

Item number: 1362462

Dimensions

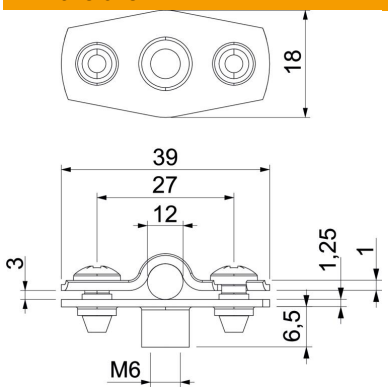

Dimension A	39 mm
Dimension B	27 mm
Dimension b	18 mm
Dimension D	12 mm
Dimension d max.	12 mm
Dimension d min.	10 mm
Dimension H1	12 mm
Dimension t1 (mm)	1 mm
Dimension t2 (mm)	1.25 mm
Dimension x	3 mm

Technical data

Distance to the wall	yes
Number of cables/pipes	1
Version for	Closed
Fastening type	Threaded connection
Maintain electrical functions	yes
For diameter	10 - 12
Halogen-free	yes
Plastic-covered	no
Material thickness	1.25 mm
ROHS-conformant	yes
Clamping range D, max.	12 mm
Clamping range D, min.	10 mm
UV-resistant	yes