Technical data sheet

External corner cover, for device installation trunking Rapid 80 type 70170
Item number: 6274610

External corner cover made of halogen-free PC/ABS for changing the direction of Rapid 80 device installation trunking of the GK, GKH, GS and GA systems. The fittings can be variably adjusted between 80° and 100° and can be used in symmetrical and asymmetrical trunking.

PC/ABS Polycarbonate/Acrylnitrile-butadiene-styrene

Master data

Item number	6274610
Type	GK-AH70170RW
Description 1	External corner
Description 2	variable
Manufacturer	OBO
Dimension	70x170mm
Colour	Pure white; RAL 9010
Material	Polycarbonate/Acrylnitrile-butadiene-styrene
Smallest sales unit	1
Unit of quantity	Piece
Weight	20.49 kg
Weight unit	kg/100 pc.
CO2 Footprint (GWP) Cradle-to-Gate	1,3356 kg CO2e / 1 Piece

Technical data sheet

External corner cover, for device installation trunking Rapid 80 type 70170
Item number: 6274610

Dimensions

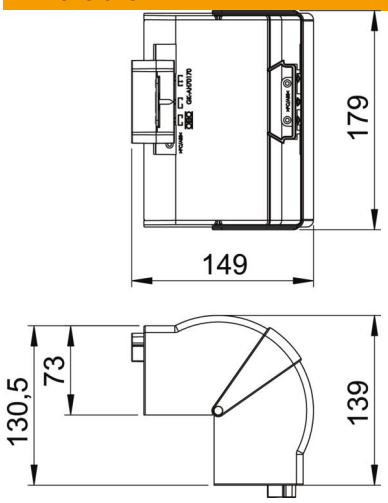

Length	130.5 mm
Width	179 mm
Height	73 mm

Technical data

Number of covers	1
Version for	Hood fitting
for duct width	170 mm
for trunking height	70 mm
Halogen-free	yes
Cable retaining clip	no
Duct connector	no
Cover mounting type	Cross-over
Mounting perforation in base	no
Cover width	0 mm
Cover width 2	0 mm
Cover width 3	0 mm
ROHS-conformant	yes
Protection rating	IP30
Protective film	no
Protection rating IK code	IK08
Symmetrical	yes
Permitted temperature range, max.	60 °C
Permitted temperature range, min.	-15 °C
Angle range, max.	100 mm
Angle range, min.	80 mm