# Technical data sheet

## Internal corner hood, for device installation trunking Rapid 45-2 type GK-53100
## Item number: 6113070

Internal corner for changing the direction of Rapid 45 device installation trunking.

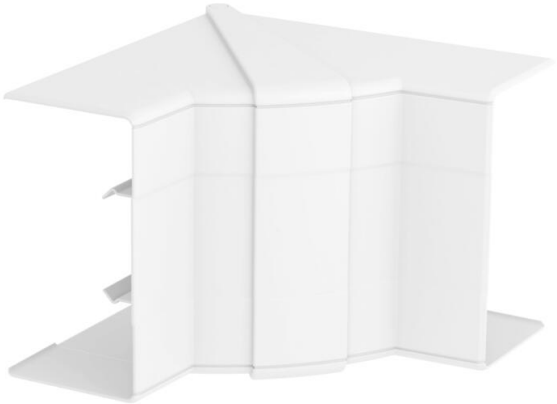

PC/ ABS Polycarbonate/Acrylnitrile-butadiene-styrene

**Master data**

| | |
|---|---|
| Item number | 6113070 |
| Type | GK-IH53100RW |
| Description 1 | Internal corner |
| Description 2 | variable |
| Manufacturer | OBO |
| Dimension | 110x145x145 |
| Colour | Pure white; RAL 9010 |
| Material | Polycarbonate/Acrylnitrile-butadiene-styrene |
| Smallest sales unit | 1 |
| Unit of quantity | Piece |
| Weight | 12.856 kg |
| Weight unit | kg/100 pc. |
| CO2 Footprint (GWP) Cradle-to-Gate | 0,8685 kg CO2e / 1 Piece |

# Technical data sheet

## Internal corner hood, for device installation trunking Rapid 45-2 type GK-53100
## Item number: 6113070

### Dimensions

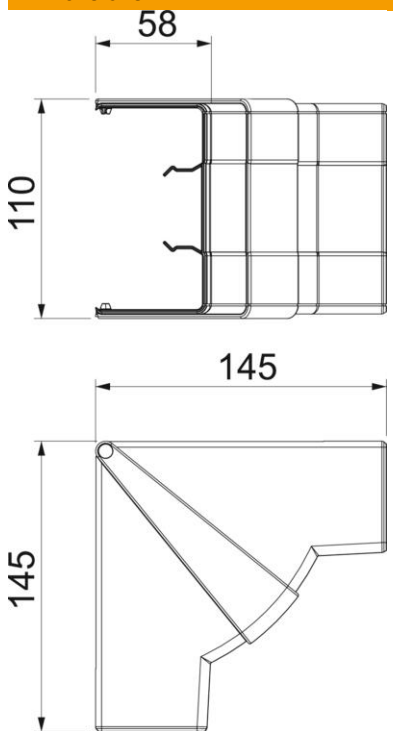


| | |
|---|---|
| Length | 145 mm |
| Width | 110 mm |
| Height | 58 mm |

### Technical data

| | |
|---|---|
| Number of covers | 1 |
| Version for | Hood fitting |
| Shape | Symmetrical |
| for duct dimension | 53 x 100 mm |
| for duct width | 100 mm |
| for trunking height | 53 mm |
| Halogen-free | yes |
| Cable retaining clip | no |
| Duct connector | no |
| Cover mounting type | Cross-over |
| Mounting perforation in base | no |
| Cover width | 0 mm |
| Cover width 2 | 0 mm |
| Cover width 3 | 0 mm |
| ROHS-conformant | yes |
| Protection rating | IP40 |
| Protective film | no |
| Protection rating IK code | IK08 |
| Permitted temperature range, max. | 60 °C |
| Permitted temperature range, min. | -15 °C |
| Angle range, max. | 97 mm |

### Technical data

| | |
|---|---|
| Angle range, min. | 83 mm |