Technical data sheet

Internal corner cover, for device installation trunking Rapid 80 type 70130
Item number: 6274440

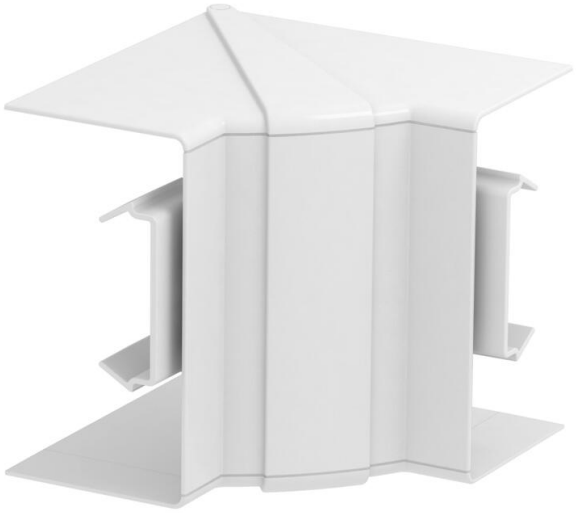

Internal corner cover made of halogen-free PC/ABS for changing the direction of Rapid 80 device installation trunking of the GK, GKH, GS and GA systems. The fittings can be variably adjusted between 85° and 95° and can be used in symmetrical and asymmetrical trunking.

PC/ABS Polycarbonate/Acrylnitrile-butadiene-styrene

Master data

Item number	6274440
Type	GK-IH70130RW
Description 1	Internal corner
Description 2	variable
Manufacturer	OBO
Dimension	70x130mm
Colour	Pure white; RAL 9010
Material	Polycarbonate/Acrylnitrile-butadiene-styrene
Smallest sales unit	1
Unit of quantity	Piece
Weight	14.9 kg
Weight unit	kg/100 pc.
CO2 Footprint (GWP) Cradle-to-Gate	1,1775 kg CO2e / 1 Piece

Technical data sheet

Internal corner cover, for device installation trunking Rapid 80 type 70130
Item number: 6274440

Dimensions

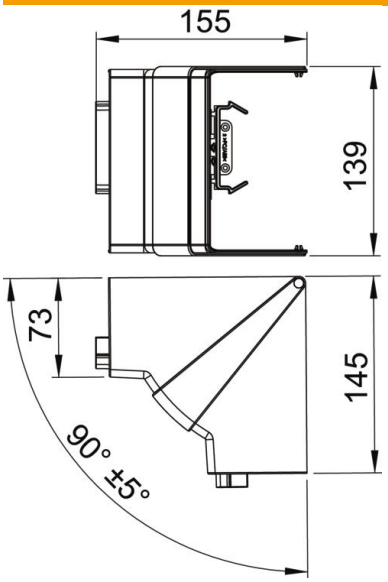

Length	145 mm
Width	139 mm
Height	155 mm

Technical data

Number of covers	1
Version for	Hood fitting
Shape	Symmetrical
for duct width	130 mm
for trunking height	70 mm
Halogen-free	yes
Cable retaining clip	no
Duct connector	no
Cover mounting type	Cross-over
Mounting perforation in base	no
Cover width	0 mm
Cover width 2	0 mm
Cover width 3	0 mm
ROHS-conformant	yes
Protection rating	IP30
Protective film	no
Protection rating IK code	IK08
Permitted temperature range, max.	60 °C
Permitted temperature range, min.	-15 °C
Angle range, max.	95 mm
Angle range, min.	85 mm