Technical data sheet

T piece 60 FT

Item number: 6038140

T piece for the creation of a horizontal branch, fitting for lock and screw-on cable trays of side height 60 mm. Screwless mounting with double clamps or screw connection with FRS truss-head screws and M6 combination nuts. Can be used indoors and outdoors. Fastening material must be ordered separately.

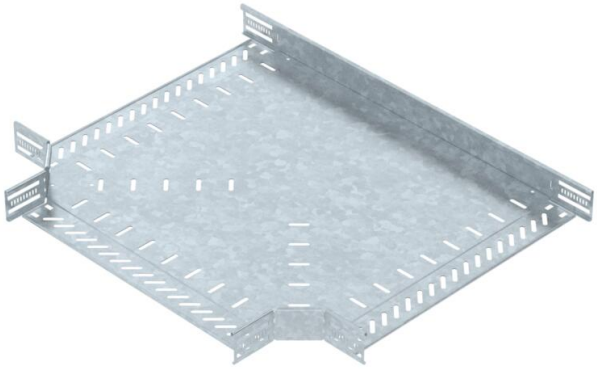

NEW

St Steel

FT Hot-dip galvanised

Master data

Item number	6038140
Type	RT 650 FT
Description 1	T piece
Description 2	for cable tray, horizontal
Manufacturer	OBO
Dimension	60x500
Colour	zinc
Material	Steel
Surface	Hot-dip galvanised
Surface standard	DIN EN ISO 1461
Smallest sales unit	1
Unit of quantity	Piece
Weight	416.9 kg
Weight unit	kg/100 pc.
CO2 Footprint (GWP) Cradle-to-Gate	13,4461 kg CO2e / 1 Piece

Technical data sheet

T piece 60 FT

Item number: 6038140

Dimensions

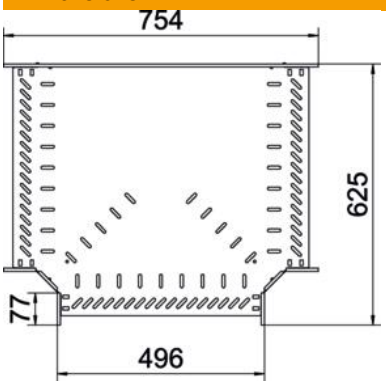

Width	500 mm
Height	60 mm
Plate thickness	1 mm
Dimension B	500 mm

Technical data

Connector version	Integrated connector
Maintain electrical functions	no
NATO hole pattern	no
ROHS-conformant	yes
Rustproof steel, pickled	no
Permitted temperature range, max.	120 °C
Permitted temperature range, min.	-20 °C
Wide-span version	no
Type of connector, cable support system	screwed/clamped
Recommended quantity of bolts	24 St.
Rail thickness	1.25 mm