Technical data sheet

Junction box T100, closed, elevated cover

Item number: 2007732

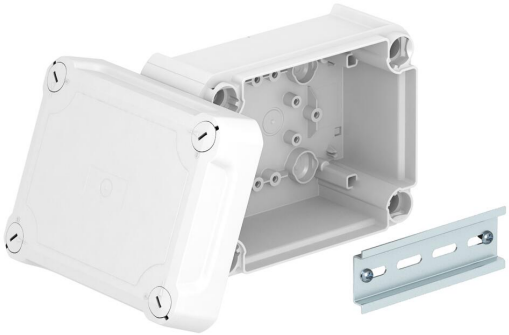

Closed junction box for the connection of cables in indoor and protected outdoor areas. Rectangular design without entries. Suitable for wall and ceiling mounting and on mounting panels. With the option of fastening inside and to mount via the corner domes. High cover with quick lock, sealable. Made from halogen-free and UV-resistant materials.

With hat profile rail.

Junction box according to DIN EN 60670. Flame-resistant to DIN EN 60695/2/11, test temperature 650°C. Impact resistance IK07 according to DIN EN 50102. Clear internal dimensions: 136x102x74 mm

PP/PC Polypropylene / polycarbonate

Master data

Item number	2007732
Type	T 100 OE HD LGR
Description 1	Junction box, closed
Description 2	with raised cover
Manufacturer	OBO
Dimension	150x116x83
Colour	Light grey; RAL 7035
Material	Polypropylene / polycarbonate
Smallest sales unit	1
Unit of quantity	Piece
Weight	23.65 kg
Weight unit	kg/100 pc.
CO2 Footprint (GWP) Cradle-to-Gate	1,0622 kg CO2e / 1 Piece

Technical data sheet

Junction box T100, closed, elevated cover

Item number: 2007732

Dimensions

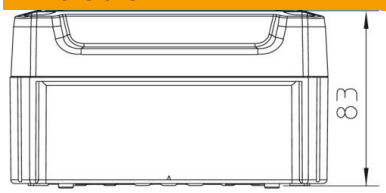

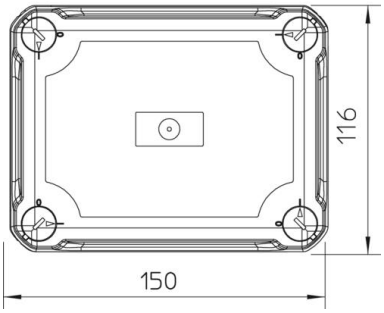

Length	150 mm
Width	116 mm
Height	83 mm

Technical data

Expandable	yes
Type of entry	None
Type of entry	Cable
Type of housing penetration	Without
Measured insulation voltage Vi	500 V
Equipment	Support rail
Cover	Not transparent
Cover fastening	Screwed
Entry from rear	yes
Entries	None
Explosion-tested version	no
Flame-resistant	acc. to VDE 0471/DIN 695 Part 2-1, test temperature 650°C
Shape	Rectangular
Maintain electrical functions	Without
For Ex zone	Without
For Ex zone gas	Without
For Ex zone dust	Without
Halogen-free	yes
Clear internal dimensions	136x102x74 mm
With screening	no
with lid	yes
Mounting type	Wall/ceiling mounting
Nominal voltage	500 V
Sealable	yes
ROHS-conformant	yes
Protection rating	IP66
Protection rating IK code	IK07.

Technical data

Permitted temperature range, max.	65 °C
Permitted temperature range, min.	-25 °C
Weatherproof	no