Technical data sheet

UDHOME2 floor socket, with cord outlet, without floor covering recess, double protective contact socket, stainless steel

Square floor socket for use in dry-care cavity and screed floors in indoor areas. Installation housing with pre-marked insertion openings for pipes (M20/M25). Cover adjustable to top edge of floor covering using four height-adjustment supports. The minimum installation depth is 100 mm, the height-adjustment range 35 mm.Frame and cover made of stainless steel and visible in the floor covering. With 2 Modul 45® sockets in the mounting support and an optional data technology support for up to 2 data connection modules.

A2 Stainless steel

Master data

Item number	7368326
Type	UDHOME2 GVV
Description 1	Floor socket
Description 2	2x protective contact socket
Manufacturer	OBO
Dimension	140x140x110
Material	Stainless steel
Smallest sales unit	1
Unit of quantity	Piece
Weight	220 kg
Weight unit	kg/100 pc.
CO2 Footprint (GWP) Cradle-to-Gate	13,2091 kg CO2e / 1 Piece

Technical data sheet

UDHOME2 floor socket, with cord outlet, without floor covering recess, double protective contact socket, stainless steel

Dimensions

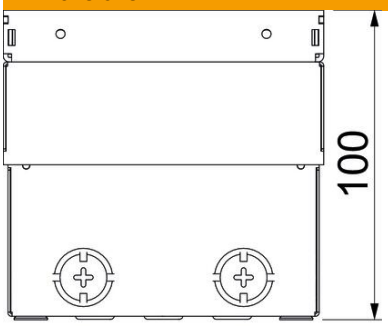

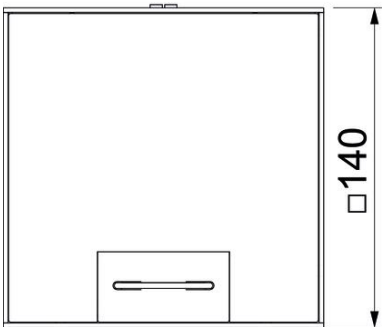

Length	140 mm
Width	140 mm
Height	100 mm

Technical data

Number of installable devices	2
Cover version	Square
Cable outlet version	Swivellable cord outlet
Equipment	Double VDE socket
Floor covering protection frame	no
Floor care	Dry
Cover version	Decorative plate
Application when used	6.101.1 Dry floor care
Application when unused	6.101.1 Dry floor care
Floor height, max.	135 mm
Floor height, min.	100 mm
Suitable for raised floor installation	yes
Suitable for screed-flush closed underfloor ducts	no
Suitable for screed-covered underfloor ducts	no
Suitable for cavity floor installation	yes
Suitable for wet care	no
Suitable for underfloor ducts	no
Device support to accept mounting boxes	no
With floor covering recess	no
Nominal size for device installation units	2

Technical data sheet

UDHOME2 floor socket, with cord outlet, without floor covering recess, double protective contact socket, stainless steel

Technical data

Standard	EN 50085-2-2
Frame version	Floor covering contact edge
ROHS-conformant	Exempt
Protection rating (IP) when used	IP20
Protection rating (IP) when unused	IP40
Protection rating IK code	IK10
Heavy-duty version	no
Vertical load, large area	to 15,000 N
Vertical load, small area	to 3,000 N
Approvals	VDE
Opening mechanism	Handle