Technical data sheet

Cable gland, long PG thread, light grey

Item number: 2024349

Cable gland with PG connection thread in cap nut design, suitable for junction boxes, housings, distributor boxes in private and industrial areas. With strain relief and integrated sealing lip, tested according to DIN EN 62444. Protection class IP68. Can be used between –20°C and +65°C.

PA Polyamide

Master data

Item number	2024349
Type	V-TEC L PG29 LGR
Description 1	Cable gland
Description 2	with long connection thread
Manufacturer	OBO
Dimension	PG29
Colour	Light grey; RAL 7035
Material	Polyamide
Smallest sales unit	20
Unit of quantity	Piece
Weight	3.86 kg
Weight unit	kg/100 pc.
CO2 Footprint (GWP) Cradle-to-Gate	0,1809 kg CO2e / 1 Piece

Technical data sheet

Cable gland, long PG thread, light grey

Item number: 2024349

Dimensions

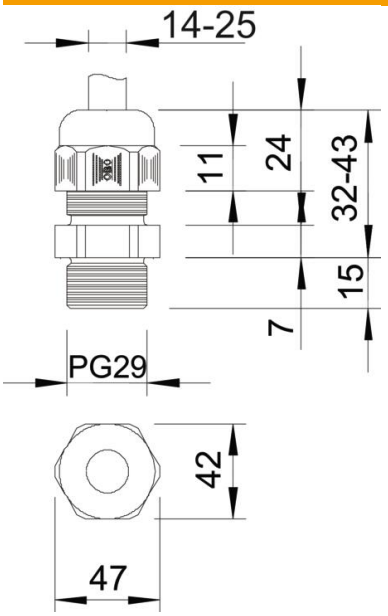

Dimension E	47.5 mm
Dimension L max.	43 mm
Dimension L min.	32 mm
Dimension L1	15 mm
Dimension L2	7 mm
Dimension L3	24.5 mm

Technical data

Type of seal	Sealing ring
Version for	Straight
Bend protection	no
Sealing area D, max.	25 mm
Sealing area D, min.	14 mm
explosion-proof	no
Flat cable gland	no
For Ex zone	Without
For Ex zone gas	Without
For Ex zone dust	Without
Thread	Pg 29
Thread type	PG
Thread length	15 mm
Nominal thread size	29
Thread increase	1.5 mm
Fibre-glass reinforced	no
Halogen-free	yes
Unstable torque	5 Nm
Sealing insert, multiple	no
With locknut	no
ROHS-conformant	yes
Impact-resistant	no
WAF	42
Protection rating	IP68
Hexagonal corner dimension	47.5 mm
Splittable gland	no

Technical data sheet

Cable gland, long PG thread, light grey

Item number: 2024349

Technical data

Permitted temperature range, max.	65 °C
Permitted temperature range, min.	-20 °C
Strain relief and wringing protection D2, max.	25 mm
Strain relief and wringing protection D2, min.	17 mm
Strain relief option	yes